REVISIONS					
ECR	REVISION	DESCRIPTION	CHANGED BY	DATE	APPROVED BY
3292	C	CONVERTED TO 16GA. MATERIAL	JC	10/11/2016	FH

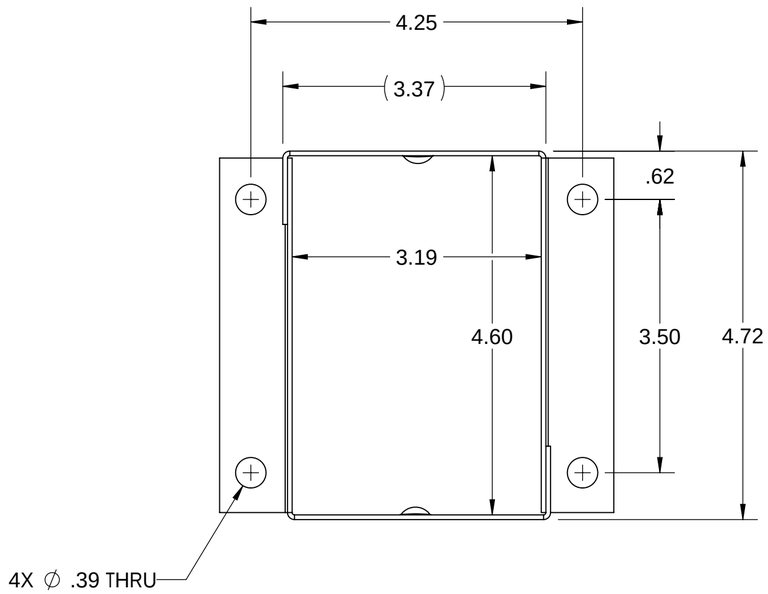

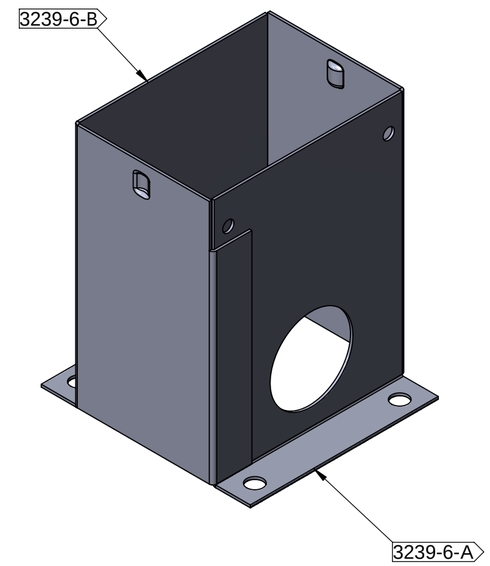

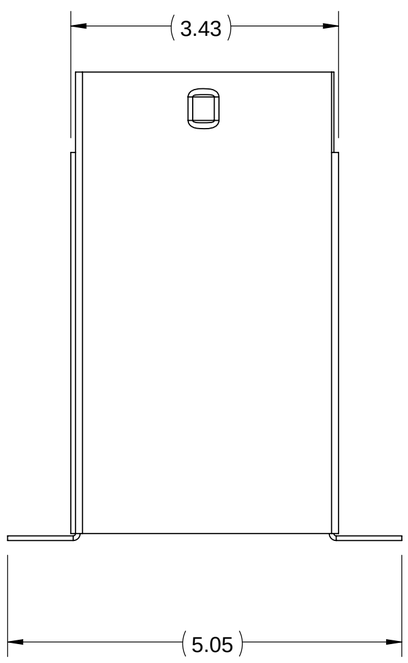

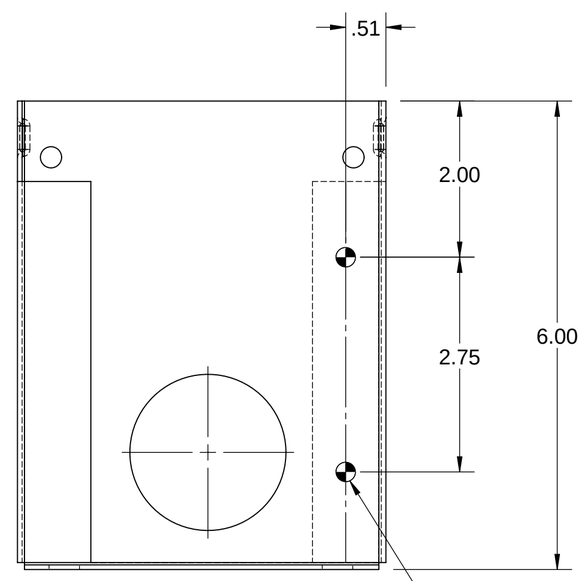

PRIOR TO POWDER COAT
2X SPOT WELD 3239-6-A TO 3239-6-B
EVENLY SPACED ON 2 FLANGES AS SHOWN

ITEM NO.	PART NUMBER	DESCRIPTION	QTY.
1	3239-6-A	CONSOLE BASE 6"	1
2	3239-6-B	CONSOLE BASE 6"	1

PROPRIETARY AND CONFIDENTIAL
THE INFORMATION CONTAINED IN THIS DRAWING IS THE SOLE PROPERTY OF **APSCO Inc.**. ANY REPRODUCTION IN PART OR AS A WHOLE WITHOUT WRITTEN PERMISSION OF **APSCO Inc.** IS PROHIBITED.

APSCO
8178 EAST 44TH STREET
TULSA, OK 74145
(918) 622-5600

TYPE OF PROJECTION: THIRD ANGLE PROJECTION

MATERIAL: CRS 16GA. (.0598 THK.) A1008 RM001105

FINISH: POWDER COAT LIGHT SEMI-GLOSS TEXTURED BLACK

DRAWN	JC	DATE 10/11/2016
CHECKED	DJ	DATE 10/11/2016
APPROVED	FH	DATE 10/11/2016
FINAL	FH	DATE 10/11/2016

TITLE: CONSOLE BASE 6" AV SERIES

DWG. NO. 3239-6

FABRICATION TOLERANCE
DO NOT SCALE DRAWING
APEN001

SHEET SIZE	SCALE	REVISION
C	2:3	C

F/N: 3239-6